BrikStar iSwarf
BrikStar M/MD

Hydraulic
Briquetting presses
for metal briquetting

HÖCKER® POLYTECHNIK

Always one idea ahead

[Use potential effectively]

With the BrikStar iSwarf and BrikStar M/MD.

In metal processing, often large quantities of waste products are incurred, such as grinding sludge and metal shavings, whose value is not recognised or remains unexploited. As a rule, these waste products are cost intensive to dispose of due to their high proportion of cooling lubricants, or they obtain only negligible revenue as scrap metal.

As a result of the “Ordinance on Facilities for Handling Substances Hazardous to Water” (AwSV), which came into force on 01.08.2017, the classification and handling of substances which are hazardous to water has changed significantly. However, these waste products can be used in an optimum way by means of a high performance briquetting press from HÖCKER POLYTECHNIK.

In addition to the significant volume reduction and the resulting minimised transport routes, the adhering cooling lubricants are pressed out to such an extent that the briquettes may be stored and transported in accordance with the new AwSV Ordinance. The BrikStar iSwarf and BrikStar M/MD series briquetting presses are ideally suited to the processing of predominantly short, loose metal shavings from the mechanical processing of non-ferrous metals, steel and cast parts or other metals such as aluminium and magnesium.

Another good reason to decide on a briquetting press from Höcker Polytechnik is, in addition to the volume reduction, the recovery of cooling lubricants, the environmental protection and the higher revenue that is achieved with briquettes compared to chips.

– Reduce oil and lubricant costs
– Lower logistics costs
– Environmental protection thanks to briquetting
– More revenue by briquettes
= Fast payback period (ROI)

All advantages of the BrikStar iSwarf and M/MD at a glance:

- **Compact and space-saving design**
- **Variable adjustable press pressure**
- **Easily adjustable briquette density**
- **Easy installation**
- **Savings of up to 95% of fresh oil or emulsion quantities**
- **Fewer storage, transport and disposal resources**
- **Added value through the sale of metal briquettes**
- **Sustainable and environmentally friendly operation**
- **Virtually complete avoidance of corrosion of metal chips**
- **Briquettes with low residual moisture for optimum smelting**
- **A PLC controlled briquette length automatic system always guarantees the maximum throughput**
- **A large touch panel allows easy operation**

BrikStar iSwarf 440/550

This series combines a compact, space saving design with a high throughput. The machine equipment is individually configurable according to customer wishes and needs:

- Integrated emulsion drip tray
- Individually configurable according to customer needs
- Briquette diameter from 45 to 100 mm
- Throughputs from 50 to 600 kg/h
- Variably adjustable briquette density
- Optimum energy efficiency

The models of this series are delivered as a complete press in a frame construction with integrated hydraulics. Numerous options expand the intended purpose and complete the program.

View top:
BrikStar iSwarf with upstream 2 m³ storage tank, twin screw for material transport and vibration unit for separating coarse particles.

View left:
A large touch panel allows easy operation.

Our solutions increase your recycling revenue by up to 50 percent.

View top:
Spraying device to avoid cold welding of dry materials as an option.

View centre:
Integrated coolant lubricant pump with level sensor (option).

View bottom:
Storage tank with 4 screws and roller module (option).

Both views
Lifting-tilting station for forklift-free emptying of chip containers

Technical data

		BrikStar iSwarf 440	BrikStar iSwarf 550
Briquette diameter		45 to 70 mm	60 to 100 mm
Briquette length		40 to 80 mm	50 to 110 mm
Hydraulic output		4 / 5,5 / 7,5 / 11 kW	5,5 / 7,5 / 11 / 15 kW
Throughput	Aluminium	60 to 230 kg/h	120 to 450 kg/h
	Steel + cast iron	120 to 330 kg/h	150 to 650 kg/h
	Non-ferrous metal	150 to 400 kg/h	180 to 700 kg/h
Basic dimensions (L x W x H)		max. 2250 x 2050 x 1590 mm	2300 x 2160 x 1630 mm
plus briquette trough		1230 mm	1290 mm

* The throughput of a briquetting machine is greatly dependent on the material properties and bulk material weight. The values indicated are average values for free flowing grey cast iron chips.

BrikStar iSwarf with lifting-tilting station for forklift-free filling of the briquetting press

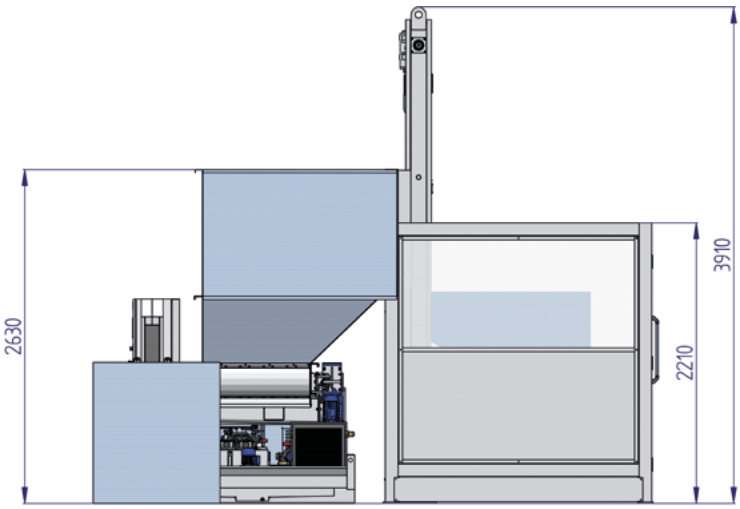

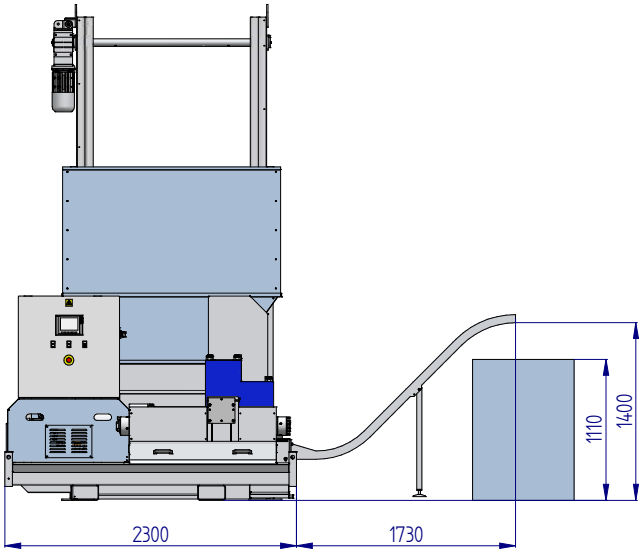

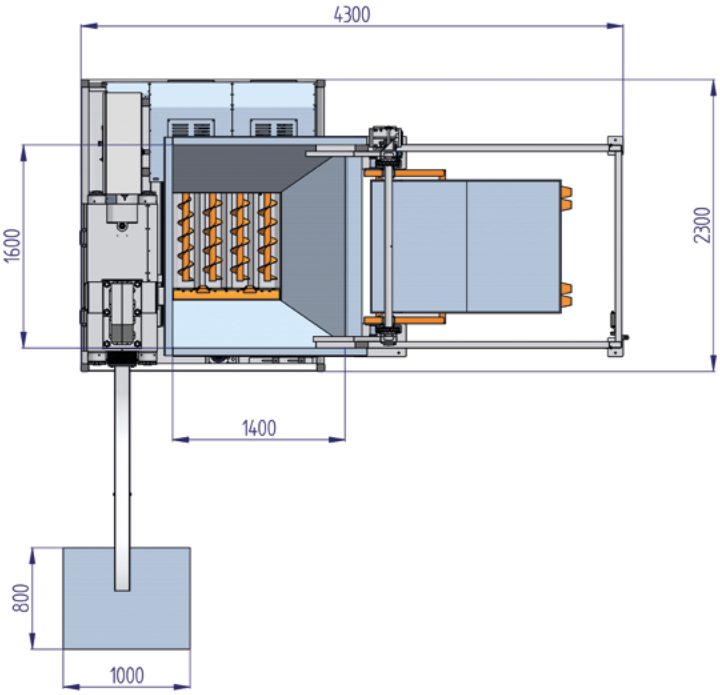

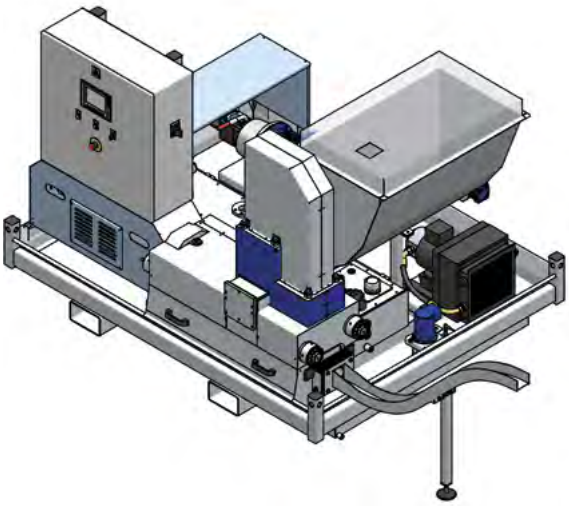

View top:
BrikStar iSwarf with 4 screw bed, roller module for processing woolly chips and lifting-tilting station.

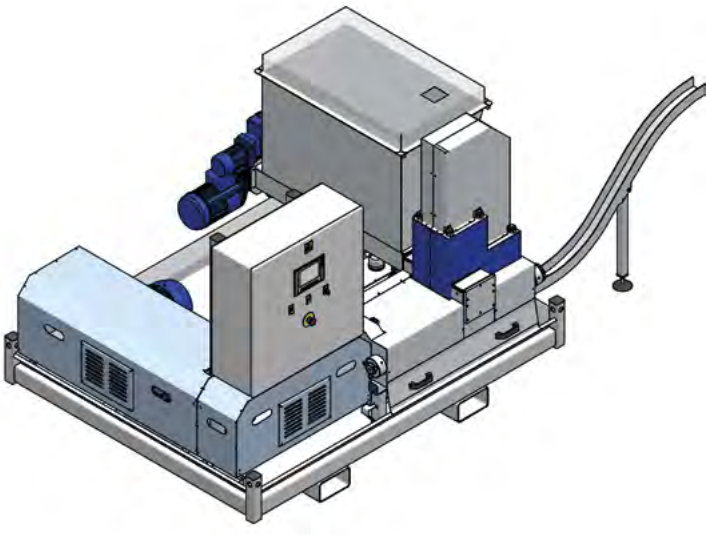

View bottom:
BrikStar iSwarf with agitator shaft container for filling via a conveyor belt.

MÖCKER
POLYTECHNIK

POLYTECHNIK

Our briquetting presses reduce your cooling lubricant requirement by up to 95 percent.

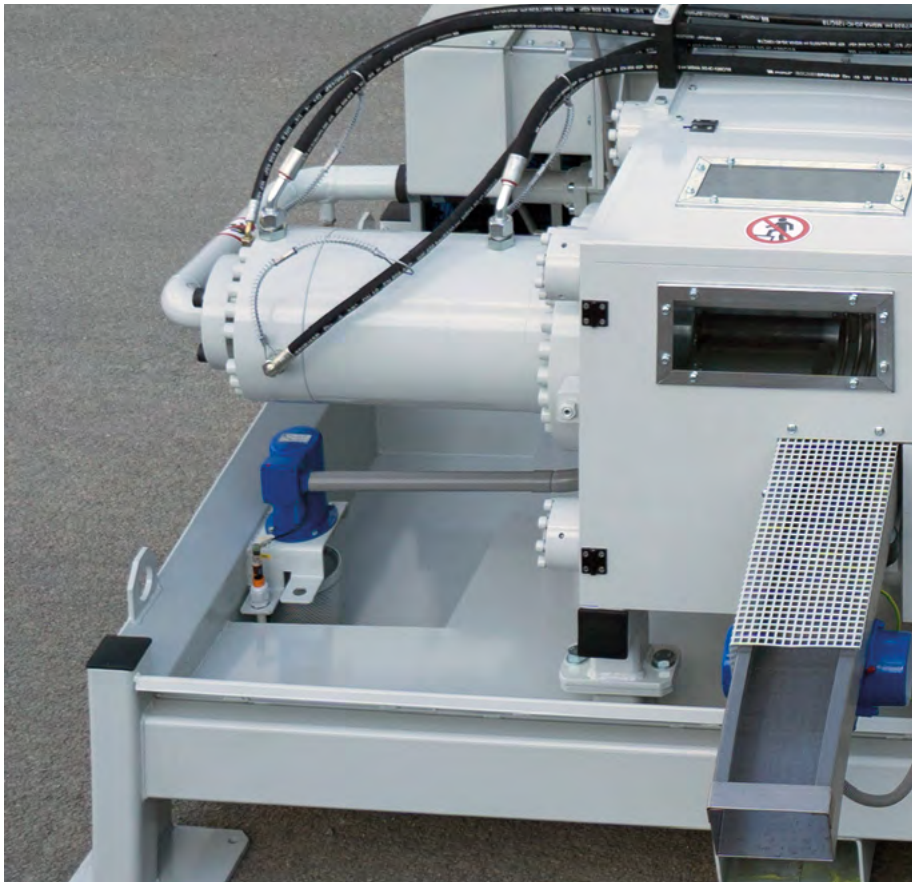

View top left:
BrikStar MD15 with 4 screw chip containers

View top right
Basic frame designed as a collecting trough for the pressed-out cooling lubricants in the standard version.

View centre right
One of the two horizontal press punches and briquette ejection.

View bottom right:
Oil cooler included in the scope of delivery.

BrikStar M/MD

Both model series are characterised by the briquettes being produced with double-sided pressing cylinders. Two horizontally arranged cylinders simultaneously press the material from both sides into briquette form.

- Compact, space saving and mobile construction
- Integrated emulsion drip tray
- Individually configurable according to customer needs
- Briquette diameter from 55 to 90 mm
- Throughputs up to 1200 kg/h
- Variably adjustable briquette density
- Optimum energy efficiency
- Also ideal for grinding sludge

Through the use of a second main press cylinder, a counter pressure is achieved and hardly any friction is generated, so that wear is reduced to a minimum. Regardless of the required throughput or briquette diameter, the pressure on the material remains almost identical for all machines.

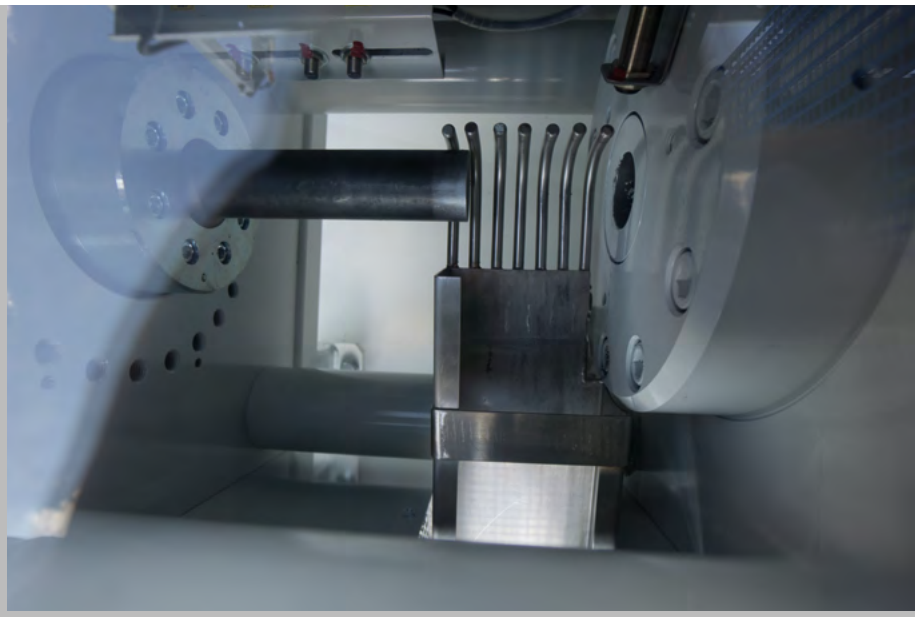

System example for a BrikStar MD

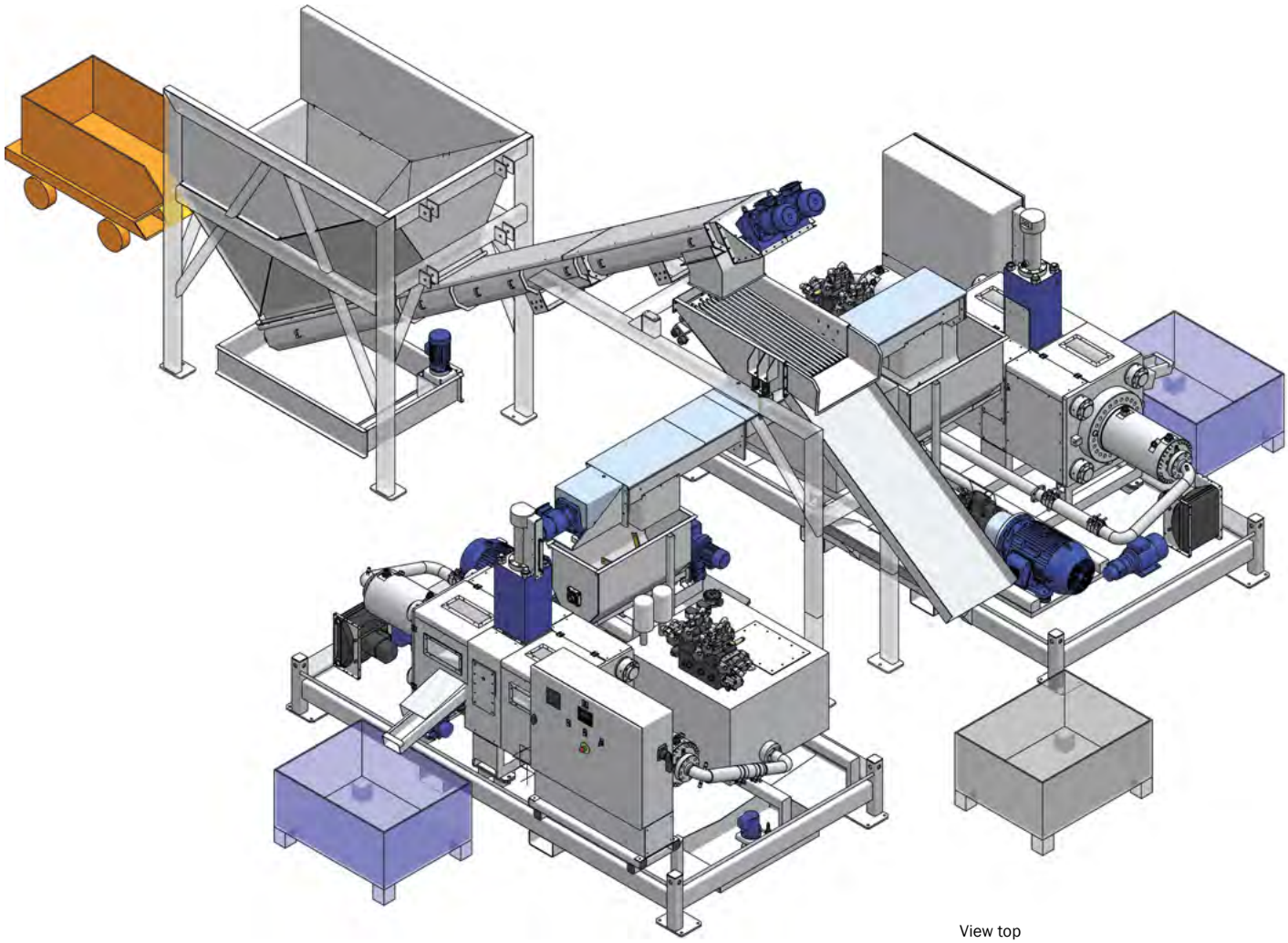

View top
Fully automatic chip line, consisting of a 2 m³ chip storage tank, Transport screws, a coarse particle separator and two BrikStar MD22-70.

Technical data

	Unit	BrikStar MD 15/55	BrikStar MD 15/60	BrikStar MD 22/70	BrikStar MD 30/80	BrikStar MD 45/85	BrikStar MD 45/90
Throughput	kg/h	400	470	650	850	1000	1200
Briquette diameter	mm	55	60	70	80	85	90
Power consumption	kW	15	15	22	30	45	45

	Unit	BrikStar M 15/60	BrikStar M 22/70	BrikStar M 30/80	BrikStar M 40/85	BrikStar M 50/90
Throughput	kg/h	200	350	500	800	1000
Briquette diameter	mm	60	70	80	85	90
Power consumption	kW	15	22	30	37,5	47,5

* The throughput of a briquetting machine is greatly dependent on the material properties and bulk material weight.
The values indicated are average values for free flowing grey cast iron chips.

BrikStar iSwarf 800

The iSwarf 800 is the compact metal briquetting plant for industrial use.

With the iSwarf 800 briquetting press, you will be equipped for particularly high throughput rates.

It produces up to 1200 kg/h of high quality aluminium briquettes and of course works completely autonomously.

Technical data iSwarf 800:

Power consumption:	**30 kW**
Briquette diameter:	**95 to 140 mm**
Throughput aluminium:	**max. 1200 kg/hour**
Throughput steel:	**max. 1600 kg/hour**

Copyright Höcker Polytechnik GmbH • Printing errors and technical changes reserved • 2019/36 • 91151511 • BrikStar iSwarf + M/MD

Höcker Polytechnik GmbH
Borgloher Straße 1
49176 Hilter a.T.W.
Germany

Telephone: +49 (0)5409 405-0
Email: info@hpt.net

www.hoecker-polytechnik.de

HÖCKER® POLYTECHNIK

Always one idea ahead